napofix®

VWA1160

EAN 5603209011607

60”-100”

VIDEO CONFERENCE AV RACK SYSTEM

DISPLAYS 60-100”

CAMERA SHELF / AV RACK SYSTEM INCLUDED

TILT +5º -10º

ADJUSTABLE HEIGHT: 1280 / 1600MM

INTEGRATED CABLE MANAGEMENT

BLACK COLOR

KG 100 MAX.

CABLE MANAGEMENT
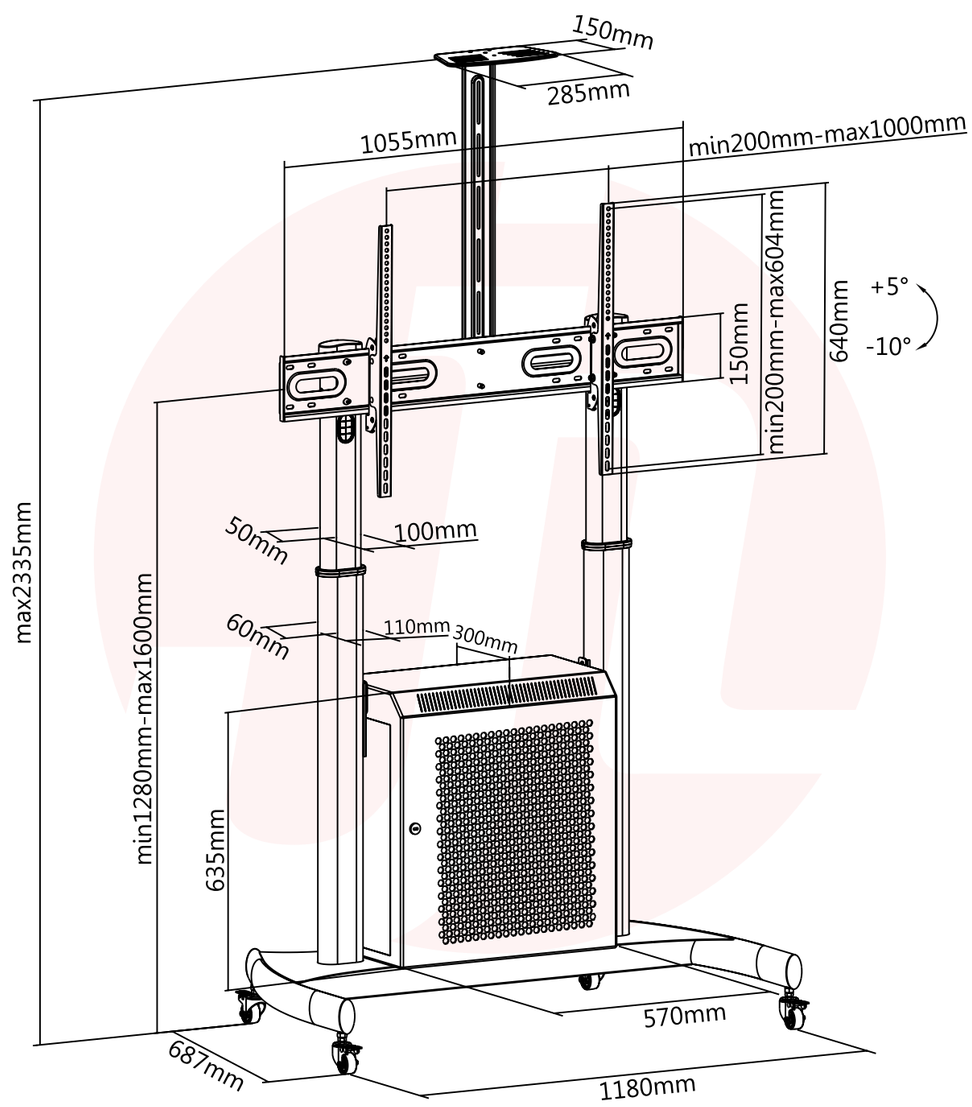
VESA 1000x600 MAX.